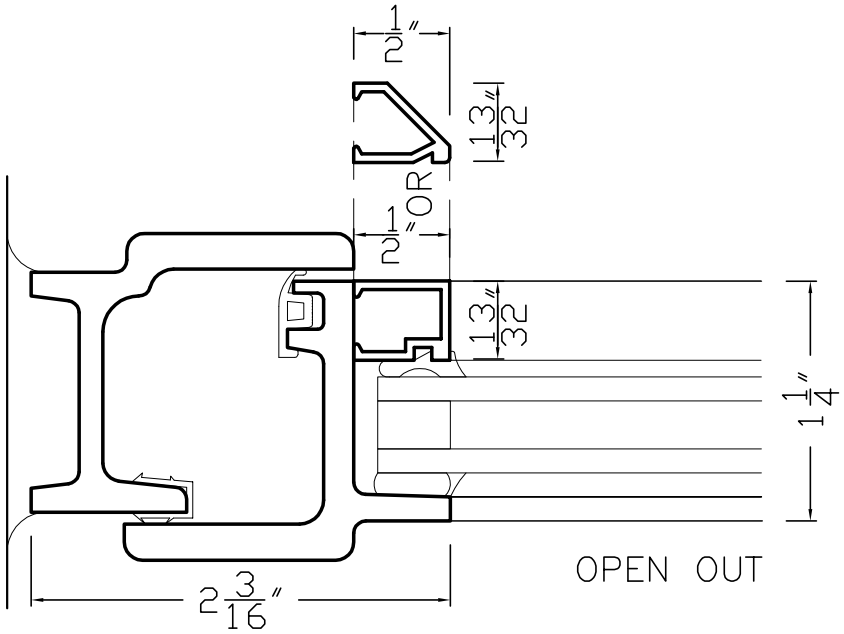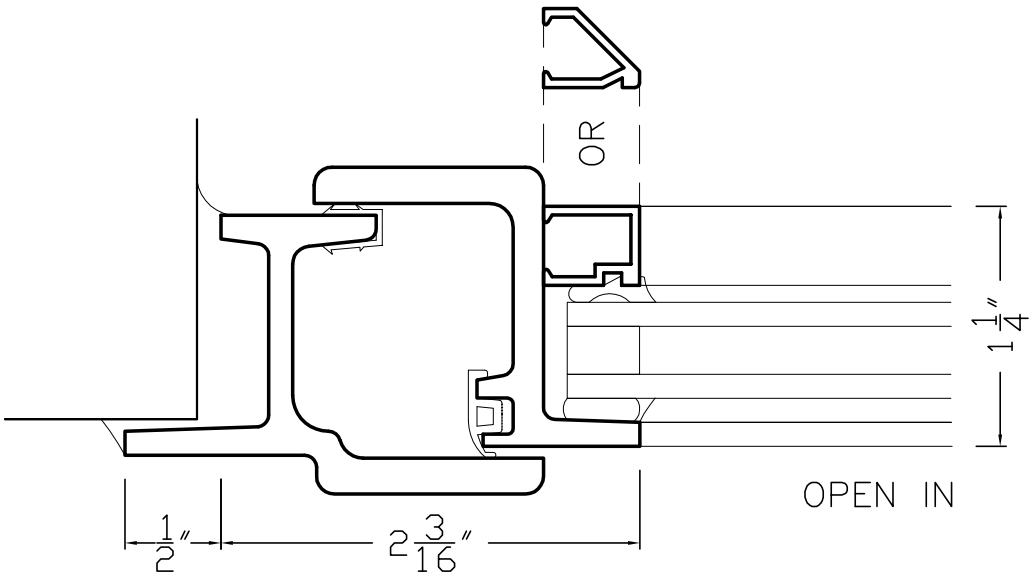W20 PROJECTED VENT – JAMB DETAILS